VHL Series

Patent

COMPACT HOPPERS

VHL

VHL+H1

Coin Cup Extension

TECHNICAL SPECIFICATIONS

Applicable Coin Sizes:
- Diameter: 24.00 - 39.00 mm
- Thickness: 1.60 - 3.50(6.50) mm

Dispensing Speed:
- US 25¢ 440 coins / minute approx.
- US 50¢ 330 coins / minute approx.

Dispensing speed may vary depending on motor gearbox deceleration ratio or coin specifications.

Counting Method:
- Proximity reflective sensor

Motor Control:
- Dedicated Control Board

Motor (Voltage) Options:
- DC 12V、DC 24V(Dedicated Controller ±5%)

Peak Current Consumption:
- DC 12V 4.90A
- DC 24V 2.90A

Motor Racing
- Continuing (DC Motor)

Operating Temperature:
- -10°C ~ +60°C

Coin Capacity:
- approx. US 25¢ / 1000 coins
- approx. US$1 / 800 coins
- approx. EUR €0.5 / 900 coins
- approx. EUR €1 / 1000 coins
- approx. EUR €2 / 800 coins

Coin Cup Extension:
- approx. US 25¢ /800 coins (Total 1800 coins)
- approx. US$1 /800 coins (Total 1600 coins)
- approx. EUR €0.5/700 coins (Total 1600 coins)
- approx. EUR €1 /800 coins (Total 1800 coins)
- approx. EUR €2 /700 coins (Total 1500 coins)

Weight
- Model VHL approx. 2.61 kg (DC Motor)
- Model VHL with H1 approx. 2.79 kg (DC Motor)

RS-232

SYMOTOR SEIKO LTD. TEL: 886-7-7353737 / FAX: 886-7-7329595 / service@Symotor.com.tw / www.symotor.com.tw

DIMENSIONS

Unit: mm

Accessories:
- Proximity Sensors: Model PS-1(Page 53~54)

The N.O. and N.C. built in the same Sensor. The user through JUMP be free to change.

- DC Control Pack: Model DH-2(Page 59~62)

Build in with Reversible Motor and Brakes

- Coin overflow and low level sensing by line

Options Accessories:
- Model DH-1 RS232(Page 55~58)
- Model DH-1 USB(Page 55~58)

Coin Cup Extension:
- H1 Type(Page 27~28)

OTHER MODELS IN THIS SERIES
- VHL ..... Page 27~28
- VHL-TK ..... Page 47~50
- VHL-2TK ..... Page 47~50
- VHL-3TK ..... Page 47~50
- VHL-4TK ..... Page 47~50
- VHL-5TK ..... Page 47~50

VHL

DC 24V / 12V

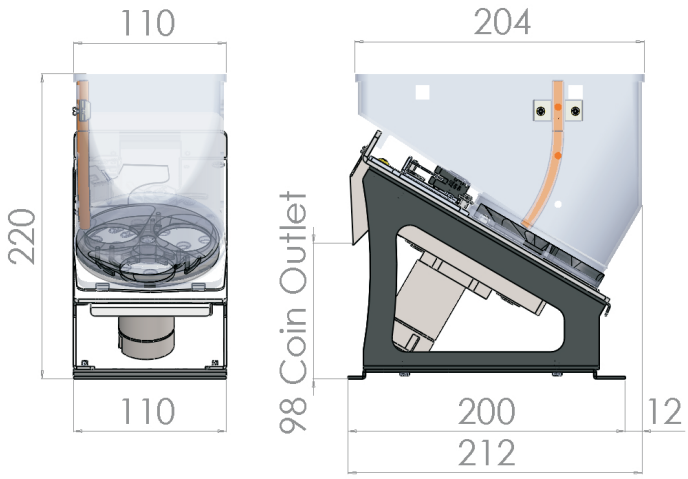

VHL+H1 Coin Cup Extension
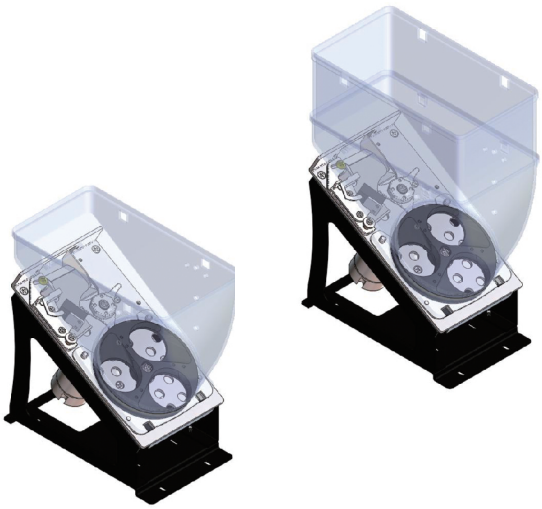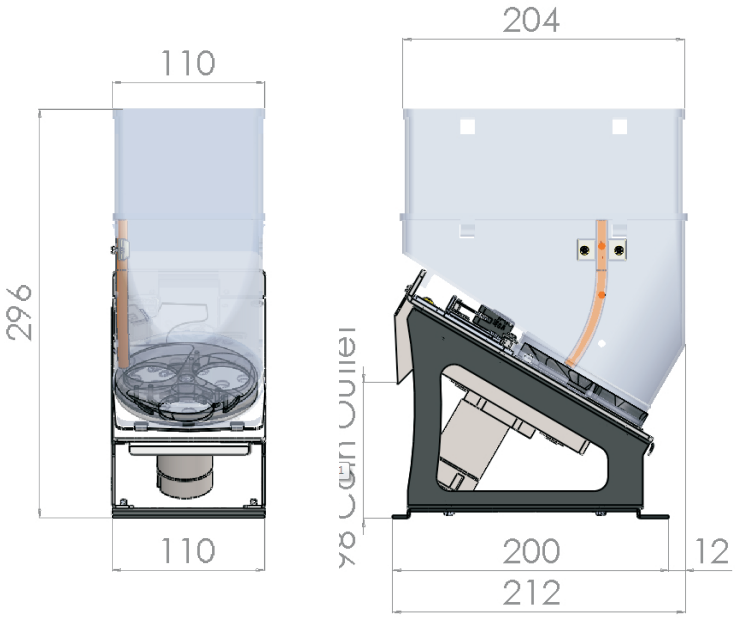
DC 24V / 12V