TECHNICAL SPECIFICATIONS

SS□W-A
SS□W-C

▼**Matched Motor:** 6W-200W
▼**Voltage:** Single-phase 110V or 220V ±10% 、50/60Hz
▼**Max. Current:** 5A
▼**Speed Control Range:** 50 Hz : 70 ~ 1400 r/min、60 Hz : 70 ~ 1700 r/min
▼**Speed Regulation for no load:** 0.1%
▼**Ambient Temperature:** 14° F~122° F (-10° C~+50° C) (nonfreezing)
▼**Ambient Humidity:** Under 85% (noncondensing)
▼**Accessories:** 11 pin for Relay socket、a knob、a dial scale、a rheostat of 20KΩ

User Guide

（1）insert power by the drawing in below,（be aware that the power source should be 110V or 220V）and then the indicator light will shine(POWER).If the motor has a independent fan，the fan will be compulsively turned on for the colling purpose (Standard requirement of the factory). If the fan is required starting with the Rotation controller, please note it when place the order. The adjustment of rotation controller can be set from LOW up to High speed as required. The indicator light will go out when the power disconnect

（2）Direction of rotation (Figure below)

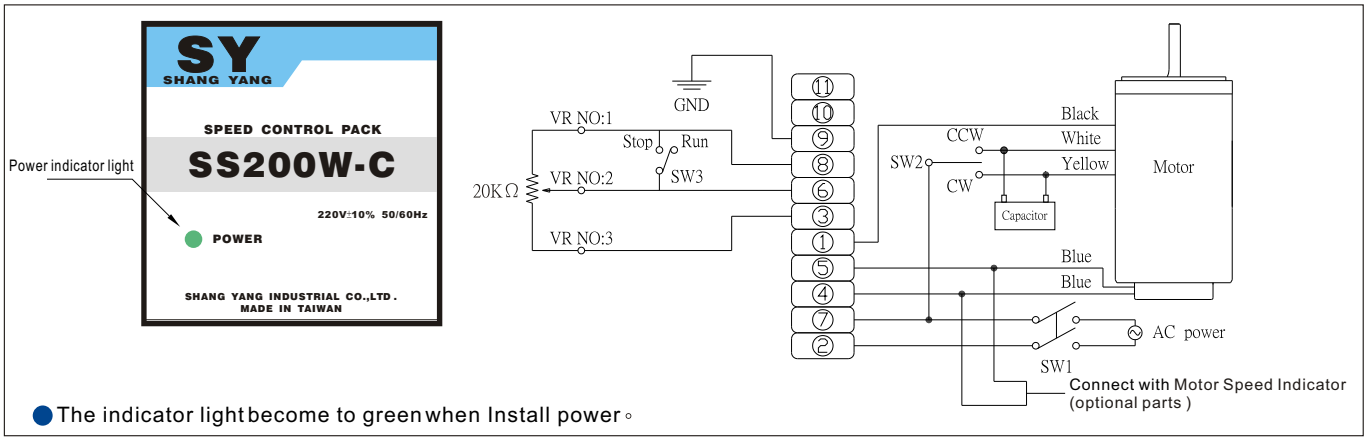

● The indicator light become to green when Install power。

INSTANTLY CW and CCW OF CIRCUIT DIAGRAM(OPTIONAL PARTS)

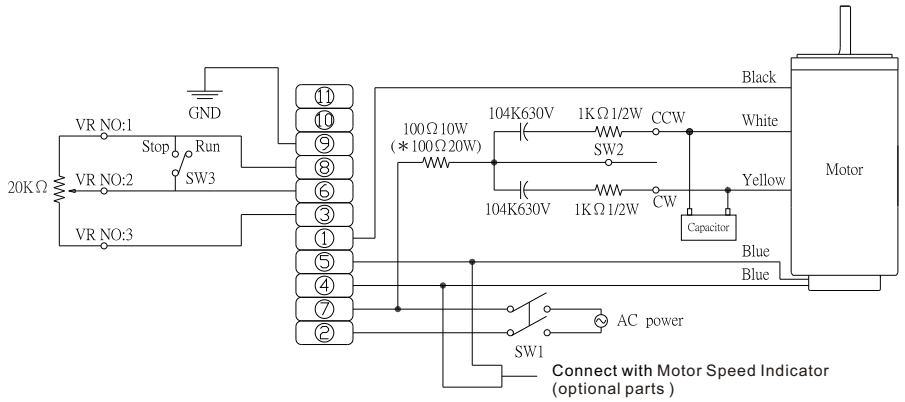

《Wiring for changing the direction of rotation instantly while the motor is working》

1. 100Ω(20W) cement wire wound resistors x 1pcs
2. 1KΩ(1/2W) precision current sensing x 2 pcs
3. 104K(630V) Mylar capacitor x 2 pcs
4. 3-way selector switch x 1pcs

All above electronic spare parts and switches are sold separately, and the function is to change the direction of rotation instantly while the motor is working. When wired these spare parts in the light of the left figure, please disconnect the original red wire coming with the controller.

Model : SS□W-A
Model : SS□W-C
Weight : 110g+50g

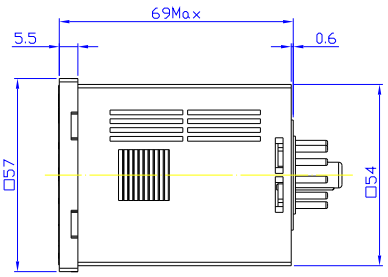

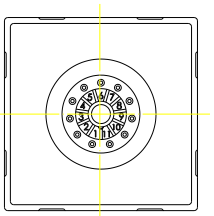

Relay socket
Weight : 50g

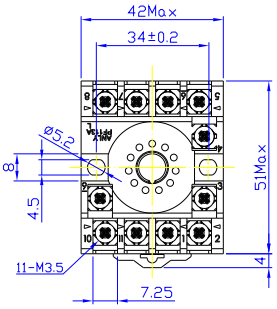

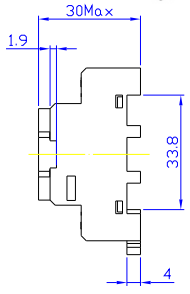

SHANG YANG INDUSTRIAL CO.,LTD. TEL: 886-7-7353737 / FAX: 886-7-7329595 / E-mail: shanyann@ms39.hinet.net / Wed: www.symotor.com.tw